THIS DRAWING IS UNPUBLISHED. RELEASED FOR PUBLICATION -,- .
© COPYRIGHT - BY TYCO ELECTRONICS CORPORATION. ALL RIGHTS RESERVED.

LOC	DIST
AA	22

REVISIONS

P	LTR	DESCRIPTION	DATE	DWN	APVD
	B	REV PER ECR-10-018314	30AUG2010	DZ	MQ.W

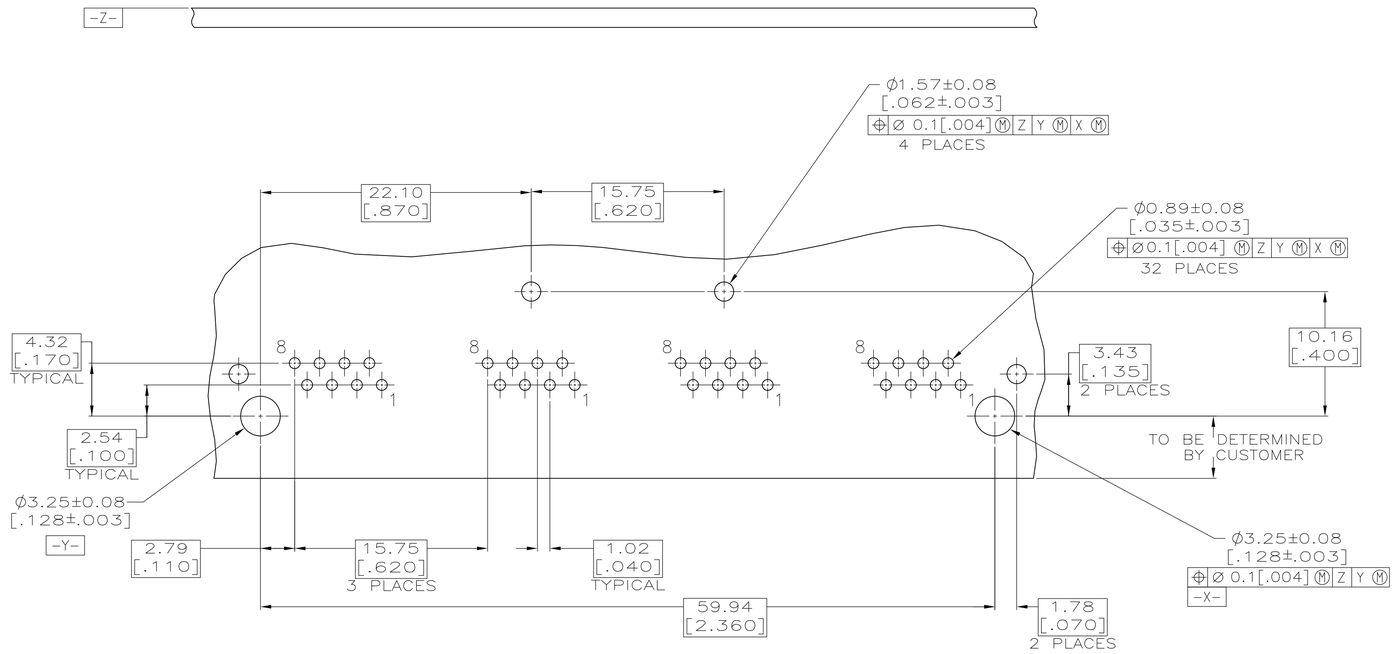

SUGGESTED PRINTED CIRCUIT BOARD LAYOUT
(COMPONENT SIDE)

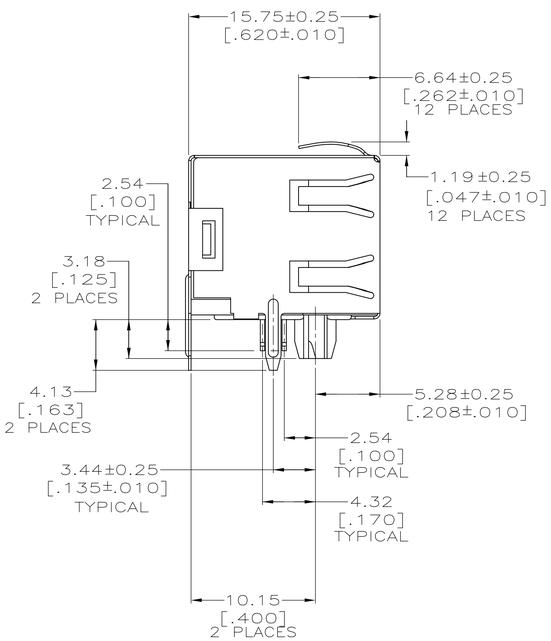

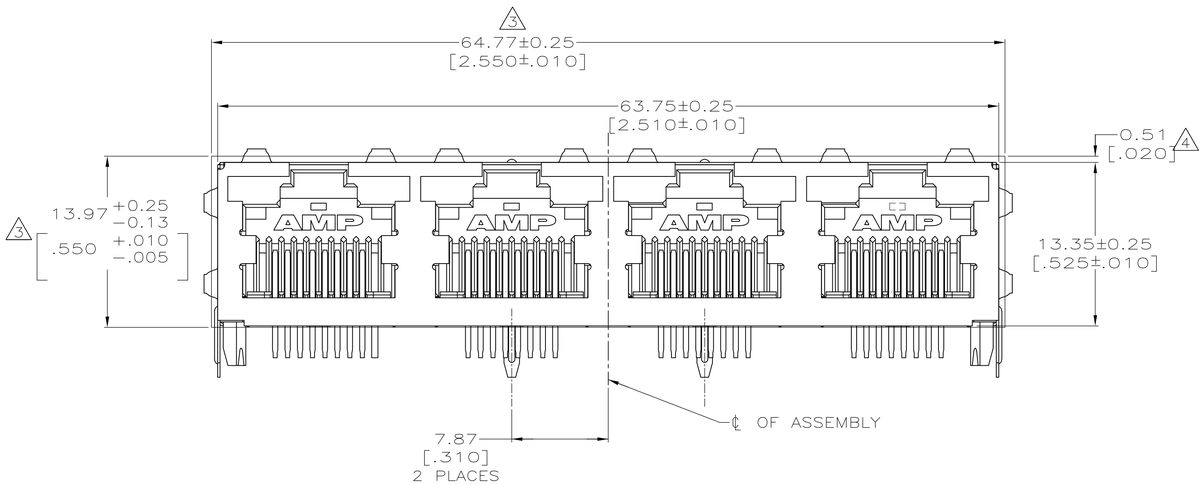

1. MATERIAL:
HOUSING – HIGH TEMPERATURE THERMOPLASTIC, BLACK, UL94V-0.

TERMINALS – .36[.014] THICK PHOS BRONZE PLATED WITH 3.81μm[.000150] MINIMUM THICK MATTE TIN IN SOLDER AREA. 1.27μm [.000050] MINIMUM GOLD IN LOCALIZED PLATE AREA. ENTIRE TERMINAL PLATED WITH 1.27μm [.000050] MINIMUM THICK NICKEL.
SHIELD – .196[.0077] THICK COPPER ZINC ALLOY PREPLATED WITH 2.03μm[.000080] – 3.81μm [.000150] BRIGHT TIN OVER 1.27μm [.000050] THICK MIN NICKEL.

2. JACK CAVITY CONFORMS TO FCC RULES AND REGULATIIONS PART 68, SUBPART F.

3. SUGGESTED PANEL OPENING DIMENSIONS.

4. SUGGESTED CLEARANCE BETWEEN TOP OF CONNECTOR AND TOP PANEL OPENING.

T&R	5406544-2
TRAY	5406544-1
PACKAGE	PART NUMBER

THIS DRAWING IS A CONTROLLED DOCUMENT.

DIMENSIONS: mm[inches]

TOLERANCES UNLESS OTHERWISE SPECIFIED:
0 PLC ± –
1 PLC ± –
2 PLC ± –
3 PLC ± –
4 PLC ± –
ANGLES ± –

MATERIAL 1
FINISH –

DWN J. ALCORTA – DOCK5 16JUN2005
CHK J. WESTMAN 16JUN2005
APVD S. FLICKINGER 16JUN2005
PRODUCT SPEC 108-1163-4
APPLICATION SPEC 114-2154
WEIGHT –

Tyco Electronics
Tyco Electronics Corporation
Harrisburg, PA 17105-3608

NAME
INVERTED MOD JACK ASSEMBLY, 1×4, SHIELDED, PANEL GROUND

SIZE	CAGE CODE	DRAWING NO	RESTRICTED TO
A1	00779	C-5406544	–

CUSTOMER DRAWING | SCALE 4:1 | SHEET 1 OF 1 | REV B